REPLACEMENT PARTS:

#451 - Felt Tip Cartridge Pen
#121 - Barograph Charts, Inch (2 yr. supply)
#120C - Barograph Charts, Millibar (2 yr. Supply)

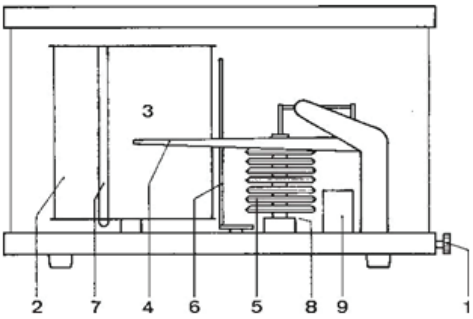

Technical Data

Precision Barograph
4 Diaphragms
Quartz movement for chart drum
Power supply: 1 x 1.5V AA (incl.)
52- one week charts in inches (incl.)
Chart size: H 2" (5.5cm) x L 9 ¼" (23.5cm)
Resolution: 2hPa
Operating Range: 960…1050hPa
Linearity deviation: +-1hPa between 980...1030hPa
Case: Mahogany & glass
Case dimension: 7¾" x 5" x 5¼" (197 x 127 x 133mm)
Weight: 3 lbs (1.36kg)

OPERATING INSTRUCTIONS

To open: Pull brass knob (1) and lift hood.

To install battery: Remove nut from top of drum, lift recording drum off (2) and insert premium AA battery in base. Replace drum and nut.

To replace felt tip pen: The recording arm (4) is fitted with a felt tip pen cartridge. To replace the pen, twist the vertical post base (6) so it holds the recording arm (4) away from the drum. Pull pen off the end of the recording arm. Carefully push new pen onto end of arm. Next, turn the drum so the pen is set to current time and day. Then twist the vertical post base (7) so the pen touches the chart. The recording arm must not touch the post. Pen replacement will be necessary after approximately 12 months or after prolonged period of idleness.

To replace chart: Twist the base of vertical post (6) so it holds the recording arm (4) away from the drum (3). Remove the metal chart clip (7) and chart. Wrap a new chart around the drum (2) with both ends overlapping at the clip position. Replace clip (7) making sure that the clip covers the chart ends so the pen will not catch on the chart. Turn drum so that pen tip is set to current time position on chart. Turn vertical post base (6) to allow pen to touch chart. It is advisable to replace chart every Monday and readjust time setting.

Altitude adjustment: The barograph must be adjusted to local pressure with the adjusting knob (8) located behind diaphragms (5). It is advisable to adjust the setting using a control barometer or your local weather station. Knob turned clockwise – recording arm will move upwards. Knob turned counter clockwise – recording arm will move downward.

NOTE: Movement damage caused by battery leakage is not covered under warranty.

NOTE: When returning for service, package carefully as Weems & Plath® cannot be responsible for damage in transit. Fill out and include the Customer Request Repair Form found on the Support page of the Weems & Plath website - www.weems-plath.com or write a note with your contact information and a description of the problem.

Send to:

Weems & Plath
214 EASTERN AVE. • ANNAPOLIS, MD 21403 • USA
410-263-6700 • FAX 410-268-8713
E-mail: support@weems-plath.com
www.weems-plath.com

Model #410-C
Made in Germany

Weems & Plath®

Manufacturer of Fine Nautical & Weather Instruments

CLASSIC BAROGRAPH

Lifetime Warranty